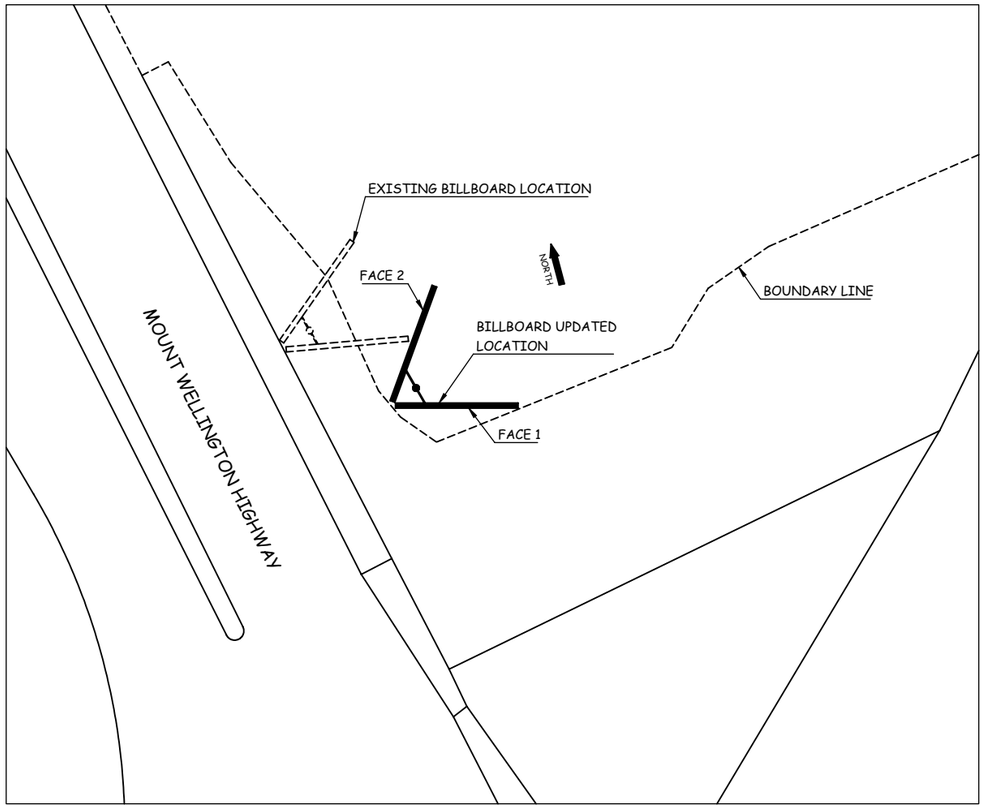

PLAN VIEW
SCALE 1:600

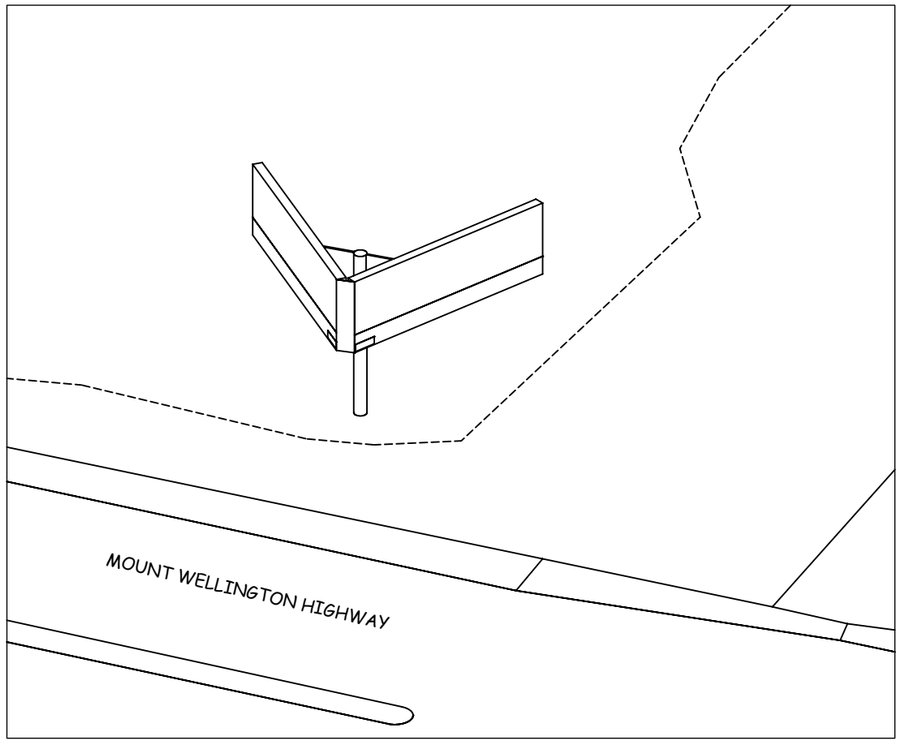

ISOMETRIC VIEW
SCALE 1:300

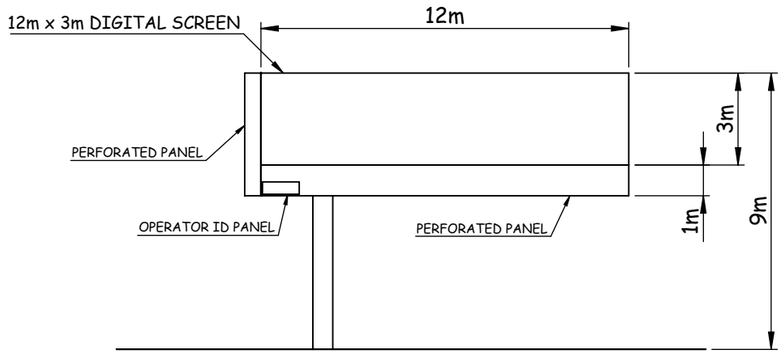

FACE 1 ELEVATION

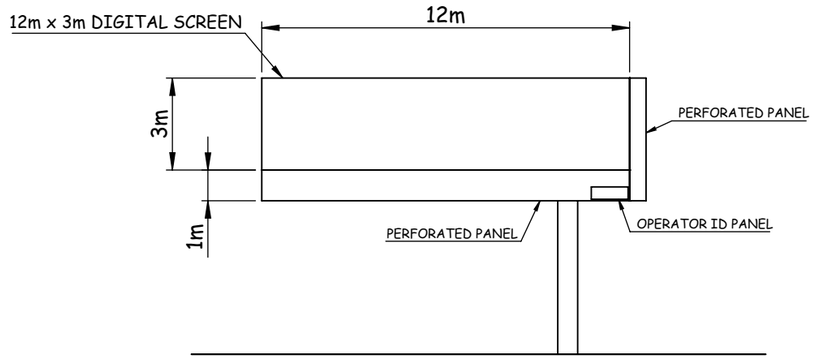

FACE 2 ELEVATION

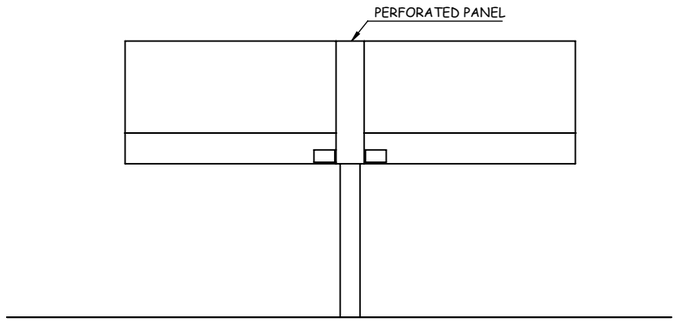

SIDE ELEVATION

Rev	Decription	Drn	Date

© 2011 ADAPTABLE SIGNS LTD.
This drawing, and the information contained in it are the property of Adaptable Signs Ltd. and may not be reproduced, store in a document retrieval system, or communicated to a third party without priorwritten consent of Adaptable Signs Ltd. or a duly appointed agent.

Phone. +64 021 274 9145
adaptablesigns@xtra.co.nz
www.adaptablesigns.co.nz

Client: BENTLEY & CO
Project: 12m x 3m DIGITAL SCREEN - VEE
Title: 400 - 450 MT WELLINGTON HIGHWAY
SITE PLAN - SOUTHERN BILLBOARD

AdaptableSigns

Drn: MG	Date: 13/08/2018	Proj: [3rd Angle]	
Chk: -	Date: -	Scale: 1:200	
App: -	Date: -	Sht: 1 of 1	
Size: A3	Drg #: 1808-003	Proj #: -	Rev: A

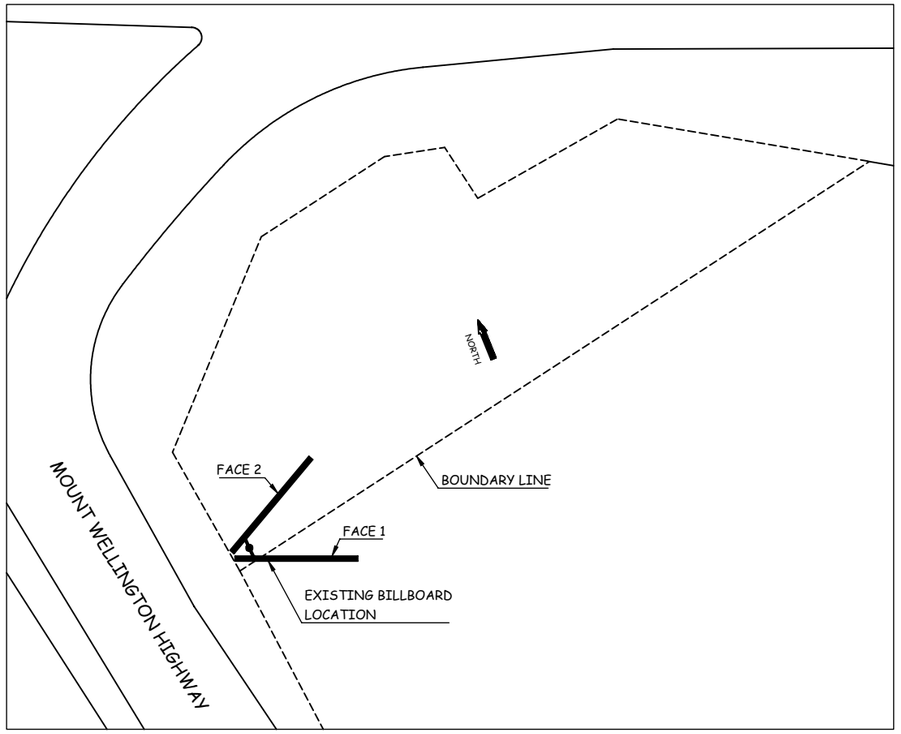

PLAN VIEW
SCALE 1:600

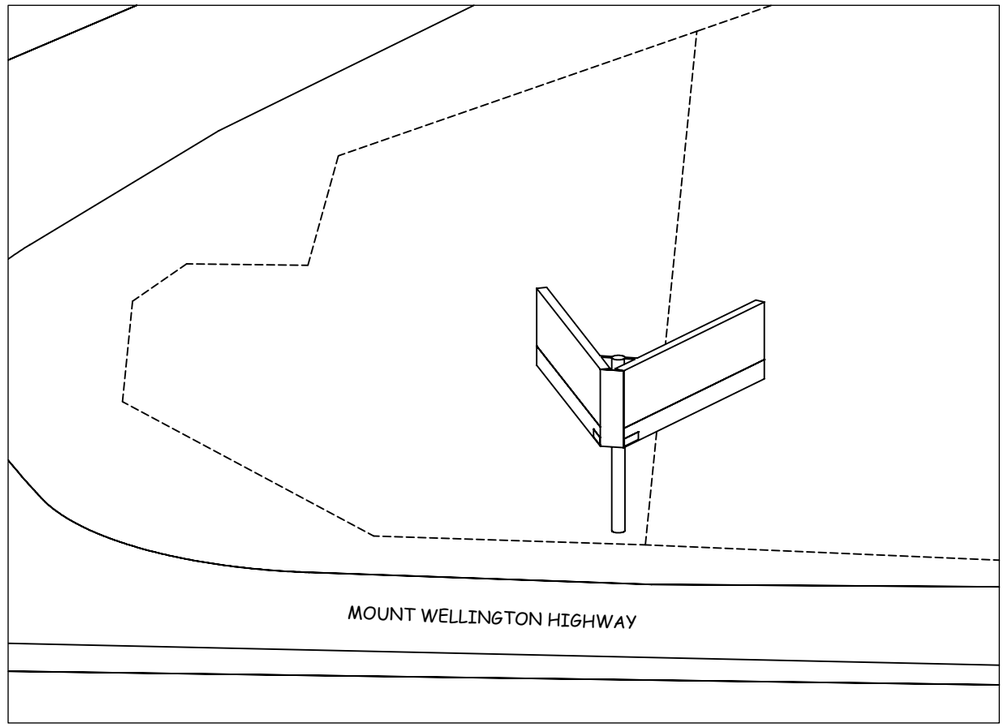

ISOMETRIC VIEW
SCALE 1:300

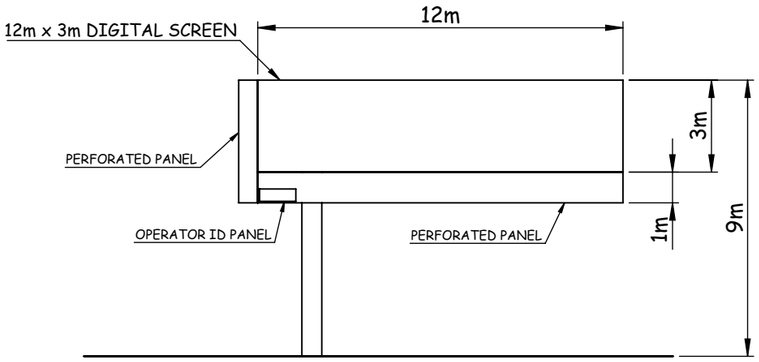

FACE 1 ELEVATION

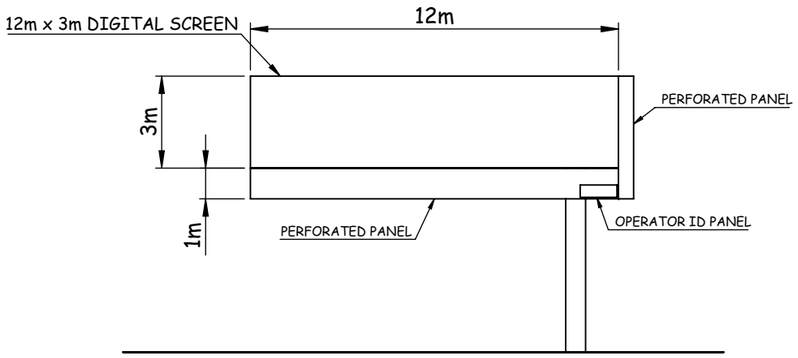

FACE 2 ELEVATION

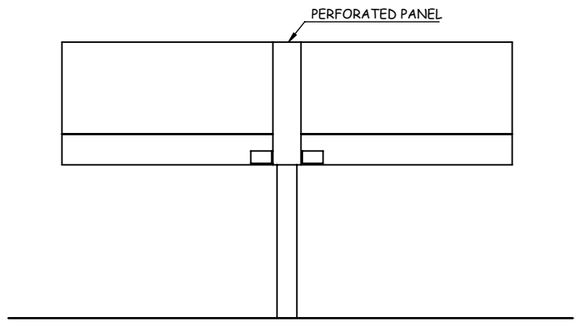

SIDE ELEVATION

Rev	Decription	Drn	Date

© 2011 ADAPTABLE SIGNS LTD.

This drawing, and the information contained in it are the property of Adaptable Signs Ltd. and may not be reproduced, store in a document retrieval system, or communicated to a third party without priorwritten consent of Adaptable Signs Ltd. or a duly appointed agent.

Phone. +64 021 274 9145

adaptablesigns@xtra.co.nz
www.adaptablesigns.co.nz

Client: BENTLEY & CO

Project: 12m x 3m DIGITAL SCREEN - VEE

Title: 400 - 450 MT WELLINGTON HIGHWAY
SITE PLAN - NORTHERN BILLBOARD

AdaptableSigns

Drn: MG	Date: 13/08/2018	Proj: [3rd Angle]	
Chk: -	Date: -	Scale: 1:200	
App: -	Date: -	Sht: 1 of 1	
Size: A3	Drg #: 1808-004	Proj #: -	Rev: A

E
F
A
B
C
D

F

12m
3m
1m
9m
Love a little
RARO
WWW.COOKISLANDS.TRAVEL
COMPANY

A
Love a little
RARO
WWW.COOKISLANDS.TRAVEL
EXPOL
EXPOL
HRH56

B
WWW.COOKISLANDS.TRAVEL
Metropolitan Air
WWW.METROPOLITANAIR.CO
ADVANCE
Schofields
NISSAN
EJG
ALL BLACKS RUGBY INSTINCT
ST
NISSAN
TIIDA
MT WELLINGTO

C

Torpedo
TAA
Mt Wellington
RARO
Love a little
RARO
WWW.LOVEALITTLE.TRAVEL
SYLVIA PARK RD
TRAVEL
COMPANY

D

LOVE a LITTLE
RARO
WWW.COOKISLANDS.TRAVEL
COMPANY
SYLVIA PARK RD
PREMIER COURIERS
09 573 1110
HIACE
KCP609
HI LIFT CRANES
KGL973
WG2203

E

Love a LITTLE
RARO
SYLVIA PARK RD
3 Otahuhu
Manukau City
Penrose
Onehunga 6
Love a LITTLE
RARO
WWW.COOKISLANDS.TRAVEL
COMPANY
TAI WAH
TOYOTA
EAW69

F

Love a little
RARO
WWW.COOKISLANDS.TRAVEL
COMPANY
TOYOTA
JYK283

I
J
H
G

J

12m
3m
1m
9m
Love a little
RARO
WWW.COOKISLANDS.TRAVEL
COMPANY
SYLVIA PARK RD
3 Otahuhu
Manukau City
Penrose
Onehunga 6
Love a little
RARO
Grange Motors

G

MT WELLINGTON HIGHWAY
INTERCHANGE
Mt Wellington
MOTORWAY
Auckland
MOTORWAY
Hamilton
RAMP
SIGNAL
ON
MAINFREIGHT
IN ORDER TO ACHIEVE, YOU MUST FIRST BELIEVE
Mt Wellington
LOVE a LITTLE
RARO
WWW.COOKISLANDS.TRAVEL
COMPANY
BBD363
TOYOTA RAV4
EGH391

H

ESTIMATED
MINUTES
VIA MOTORWAY
MAERSK
www.colourworx.co.nz
FACEBOOK.COM/COLOURWORXNZ
COLOUR
WORX
your image. on anything.
DEZ171
Vehicles | Events | Signage | Interior
Mangere IC
EnviroNZ
JTK397
SSANGYONG
LOve a LiTTle
RARO
WWW.COOKISLANDS.TRAVEL
COMPANY

Love a little
RARO
Otahuhu
Manukau City
Penrose
Onehunga
HirePlants.com
0800 800 175
BDT233

J

Love a little
RARO
WWW.COOKISLANDS.TRAVEL
COMPANY
SYLVIA PARK RD
3 Otahuhu
Manukau City
Penrose
Onehunga 6
Love a little
RARO
Grafe Motors
Drive with confidence